XMW Inc., www.xmwinc.com
Jangyoungsil Bldg. #201, 105 Sinildong-ro, Daedeok-gu, Daejeon 34324 Korea, T: +82 42 345 0001, F: +82 42 345 2220

SATCOM RECEIVER

LNB

Ka Quad-band PLL LNB RQ9000I

TYPICAL SPECIFICATIONS

Noise figure	2.2dB max
LO stability	±10, ±25, ±50 KHz
Phase noise	-60dBc/Hz @100Hz -70dBc/Hz @1KHz -80dBc/Hz @10KHz -90dBc/Hz @100KHz
Input VSWR	3.5 : 1
Output VSWR	2.0 : 1
Conversion gain	58dB typ
Gain flatness	±2.5dB max
Output P1dB	+5dBm min
IP3	+15dBm min
RF input level	-30dBm max
LO leakage (Input)	-50dBm max

Spurious	
Signal related	-60dBc max @-10dBm
Power supply related	-50dBc max @-10dBm
Harmonics	-50dBc max @-10dBm
Image rejection	Band-1: 40dBc min Band-2: 30dBc min Band-3: 0dBc min Band-4: 0dBc min
Switching voltage	Band-1: +13V Band-2: +13V / 22KHz Tone Band-3: +18V Band-4: +18V / 22KHz Tone
DC voltage / current	+12 to +24 V / 400mA
Input waveguide	WR-42
Output connector	N-female, F-female
Dimension	114(L) x 70(W) x 39(H) mm
Weight	500g
Operating temperature	-40 to 60°C

FREQUENCY BANDS AVAILABLE

	Band-1	Band-2	Band-3	Band-4
RF freq. (GHz)	17.0 - 18.0	18.0 - 19.0	19.0 - 20.0	20.0 - 21.0
LO freq. (GHz)	16.05	17.05	18.05	19.05
IF freq. (MHz)	950 - 1950	950 - 1950	950 - 1950	950 - 1950

HOW TO ORDER Ka QUAD-BAND PLL LNB

RQ9222IF

* Other frequency bands can be available upon request.

- Output connector ····· N: 50Ω, F: 75Ω
- 10MHz reference ····· I: Internal PLL
- Noise figure ····· 22: 2.2dB
- LO stability ····· 2: ±10KHz
3: ±25KHz
4: ±50KHz
- RQ9: Ka Quad-band LNB series

Copyright XMW Inc.
Specifications are subject to change without notice.

SATCOM RECEIVER
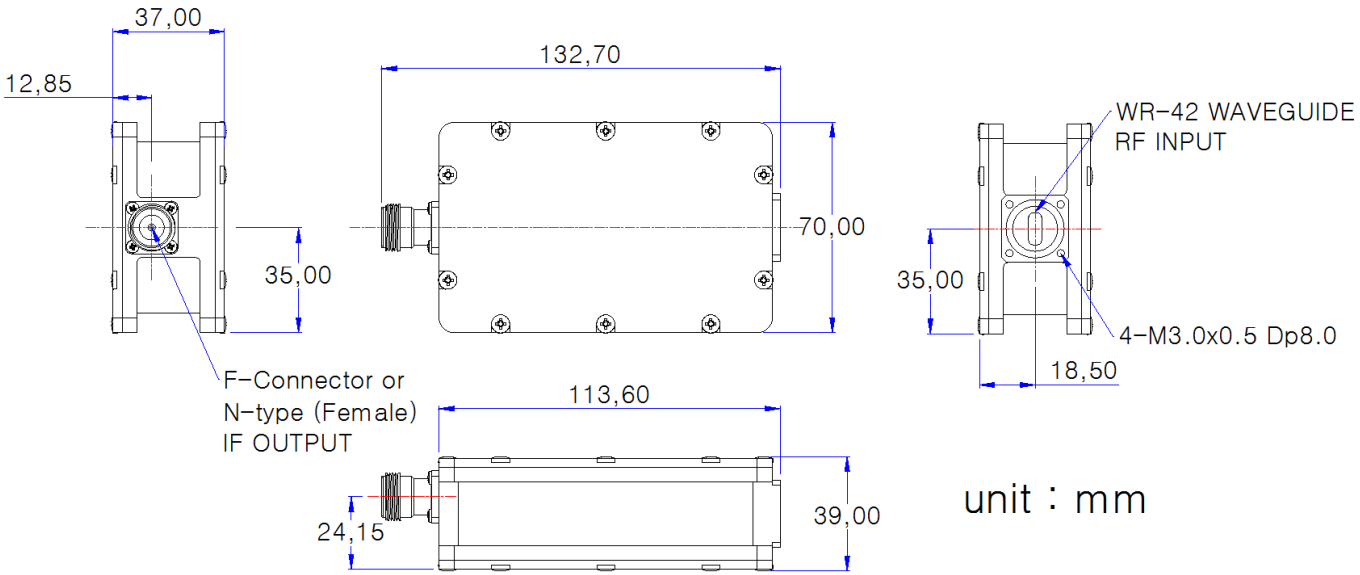
OUTLINE DRAWING